Rachel Livedalen, *Doris Jean*. 2018 – present

Eastern State Penitentiary Historic Site

Guidelines for Artist Proposals, 2020 Season

Proposal Deadline:
Uploaded electronically or delivered to Eastern State Penitentiary by
Wednesday, June 12, 2019, 11:59 pm

Contact:
Sean Kelley, Senior Vice President, Director of Interpretation
sk@easternstate.org (215) 236-5111 x213

Why Collaborate with Artists?

Nearly 100 artists have created installations for Eastern State Penitentiary's cellblocks and yards. Some of these installations were among the most successful programming the site has presented and many brought perspectives and approaches that would not have been possible in traditional historic site interpretation.

We seek installations that will explore Eastern State Penitentiary's history and evoke a broad range of emotions. We seek installations that will make connections between the complex history of this building and today's criminal justice system and corrections policies.

We want to humanize these difficult subjects with personal stories and distinct points of view. We want to hear new voices—voices that might emphasize the political, or humorous, or bluntly personal. *We want our visitors to be challenged with provocative questions,* and we're prepared to face some provocative questions ourselves.

In short, we seek memorable, thought-provoking additions to our public programming, combined with true excellence in artistic practice.

If our definition of this program seems broad, it's because we're open to approaches that we haven't yet imagined.

Surprise us.

Sean Kelley
Senior Vice President, Director of Interpretation

Funding Level One

Standard: $7,500 Max

We welcome work that addresses Eastern State Penitentiary's complex history or architecture, the U.S. criminal justice system, and any subject that makes an emotional or intellectual connection to these subjects. (See "Why Collaborate with Artists?" above.)

Any subject listed below in *Criminal Justice Today* could also be appropriate for Standard project funding.

A maximum of two Standard projects will be awarded.

***Orientation times, submission requirements and deadlines are identical for both funding levels, unless otherwise noted.**

Funding Level Two

Criminal Justice Today: $15,000 Max

We seek an artist or team whose work will complement Eastern State Penitentiary's programming around contemporary corrections, inspiring reflection on one or more of these central themes:

- Who goes to prison? Who gets away with it? Why? Have you gotten away with something illegal?
- How might your appearance, background, family connections or social status have affected your interaction with the criminal justice system?
- What are prisons for? Do prisons "work"? What would a successful criminal justice system look like?
- What are the biggest challenges facing the U.S criminal justice system today?
- Call to action: How can visitors affect change in their communities? How can they influence evolving criminal justice policies?

These questions reflect the kind of conversations we have with our visitors. It is not necessary for proposals to address any single question directly, rather proposals should consider this broad set of questions as inspiration.

We are interested in artists who propose work that is interactive/participatory. Artists with an existing body of work addressing social change will be given preference; however, we are open to proposals from artists new to this practice if their ideas are particularly strong.

A maximum of one *Criminal Justice Today* project will be awarded.

***Orientation times, submission requirements and deadlines are identical for both funding levels, unless otherwise noted.**

Important Dates and Deadlines

Orientation Tours:

We strongly recommend that applicants begin the proposal process by attending an artist orientation. These informal tours/conversations give artists a chance to explore the space, discuss what makes a proposal successful, ask questions, and observe visitors interacting with the current installations. There is no charge for attending an orientation.

Orientations last about one hour. Please dress for the weather. Please do not use tape measures or other measuring devices. Our staff can provide measurements for all spaces not listed in the FAQ section of this document.

Applicants with a reservation may arrive at any time on the day of a scheduled orientation beginning at 10 am and/or stay after the tour until the site closes for the day at 5 pm. We recommend using this time to take the site's audio tour and explore other programming in the space. Photography is welcome before or after the orientation tour, but not during the tour itself.

Artists who cannot attend a scheduled orientation but wish to visit the site must pay standard admission and will not be able to meet with historic site staff at the time of their visit. Questions following a visit are welcome by email or phone.

Please sign up for an artist orientation at least 48 hours in advance at this link: https://goo.gl/forms/r2xSNYz9fPfGL7tm2. Space is limited to 35 applicants per orientation.

Studio assistants and collaborative partners are welcome. Please make reservations for all members of your team. Friends and family may not join the orientation tour and should pay standard admission and tour the site separately. We are happy to make common sense exceptions such as a child traveling with a single adult. Please let us know if you need such accommodation.

If you have questions or cannot access the link to make a reservation, please contact Annie Anderson at (215) 236-5111 x227 or aa@easternstate.org.

Artist Orientation Dates and Times for 2019 Season (Proposals for 2020)

Saturday	March 16	1:00 pm
Saturday	April 20	2:00 pm
Friday	May 3	3:00 pm
Saturday	May 18	1:00 pm

Orientation tours are strongly recommended but not required. We understand that travel expenses will make it impossible for some applicants to attend an orientation. We welcome questions by phone or email from those who cannot attend orientations.

A videotaped orientation tour can be found here: EasternState.org/art.

Proposal Deadline:

Wednesday, June 12, 2019, 11:59 pm

Proposals can be uploaded electronically. A link to the submission portal will be available by April 1, 2019 at EasternState.org/art.

If it is difficult or impossible to access the Internet or submit a proposal online, please write, call, or email us.

Annie Anderson
Eastern State Penitentiary Historic Site
Artist Proposals – 2020 Season
2027 Fairmount Avenue
Philadelphia, PA 19130

215-236-5111 x227
aa@easternstate.org

Grace Period: There will be a 1-day grace period for all proposals. The online submission portal will close at 11:59 pm on Thursday, June 13, 2019, and no further submissions will be possible.

Notification and Installation Dates:

Applicants Notified of Decision via Email By: Friday, September 20, 2019

Initial Payment: On or before Thursday, October 10, 2019 (75% of approved budget, subject to signed letter of agreement)

Installation Completed By: 5 pm, Thursday, April 23, 2020

Removal of Work: To be completed by Wednesday, December 23, 2020 (unless the installation is extended by committee approval)

Final Payment: Within three weeks of removal of work from Eastern State.

Planning a Proposal

Virgil Marti, *For Oscar Wilde*. 1995

Eligibility:

• Collaborative proposals are permitted; individual artists may participate in only one proposal per year (whether alone or as part of a collaboration). Artists may not submit a proposal into both Standard and *Criminal Justice Today* funding levels.

• Artists who have exhibited at Eastern State must wait five years after removal of their work before submitting a proposal for a new installation.

• Applicants may not submit previously rejected proposals unless specifically invited to do so.

• Artists must be at least 18 years old.

• Proposals must be for a site-specific installation.

• These guidelines are for artists who wish to install visual, video or other installation work to remain on view during all public hours at the historic site. The site does host performing arts, films, and lecture series. Please contact Sean Kelley at sk@easternstate.org for proposals in the performing or live arts.

Exhibition Conditions:

Eastern State Penitentiary Historic Site is a National Historic Landmark, the highest designation for a historic property under Federal law. It is also a ruin, abandoned in 1971, and stands today as an architectural shell. The building has virtually no running water, little climate control, and limited electrical service. These conditions can be destructive to many types of materials. Many artists working at Eastern State incorporate the inevitable deterioration into their piece.

Works on paper age very quickly and will look weathered within a few weeks. Electronics do surprisingly well.

Because of the building's condition, neither Eastern State Penitentiary Historic Site, Inc. (the organization that administers the historic site) nor the City of Philadelphia (the owner of the site) can be responsible for damage to work. The historic site carries insurance for the safety of the

public while on the property, including artists during the installation process, but not for the value of the installations on display.

Electricity is available in several locations throughout the site. Most locations do not have electric service. Extension cords are limited to a 9-foot cord from the outlet to the unit requiring power. See FAQ for more information.

Because of Eastern State's historic designation, art installations may not permanently damage or alter the building or artifacts in any way without prior written approval. This approval process includes what might seem to be relatively minor damage such as nailing into plaster, taping onto or painting surfaces, brushing paint from the walls, or removing debris. Failure to account for this restriction eliminates many proposals during the selection process.

Many artists have found creative ways to install work that creates an illusion of permanence but is reversible. We are happy to share examples of previous solutions to these challenges.

Artists are responsible for the installation and removal of their work. Artists will have access to the building for planning and installation once their proposal has been accepted and they have signed a Letter of Agreement.

Our tour staff can perform limited maintenance (turning on and off power, sweeping, monitoring the condition of the work, etc.). Artists should assume, however, that the staff at the historic site will not be able to monitor the spaces during all public hours, and any substantial maintenance should be accounted for by the artist or contractors hired by the artist.

William Cromar, *GTMO*. 2004 – present

Choosing a Location:

Artists may apply for any public area in the penitentiary complex except Cellblock 2 and the main audio tour route (indicated with a red line on the site map below). Some installations, such as Linda Brenner's *Ghost Cats* have been sited in several locations throughout the penitentiary.

We recommend making space requests as broad as possible ("any cell with electricity"), since it gives us confidence that we can find a site for the work. We also encourage artists to propose specific locations if those locations are important to the piece, such as Nick Cassway's request for his installation *Portraits of Inmates in the Death Row Population Sentenced as Juveniles*, which faced Death Row.

Spaces on the outside of the penitentiary walls may also be available, including in the Corinthian and Brown Street garden areas. These proposals will require another set of approvals from neighborhood groups.

Our staff is available to consult on proposed locations.

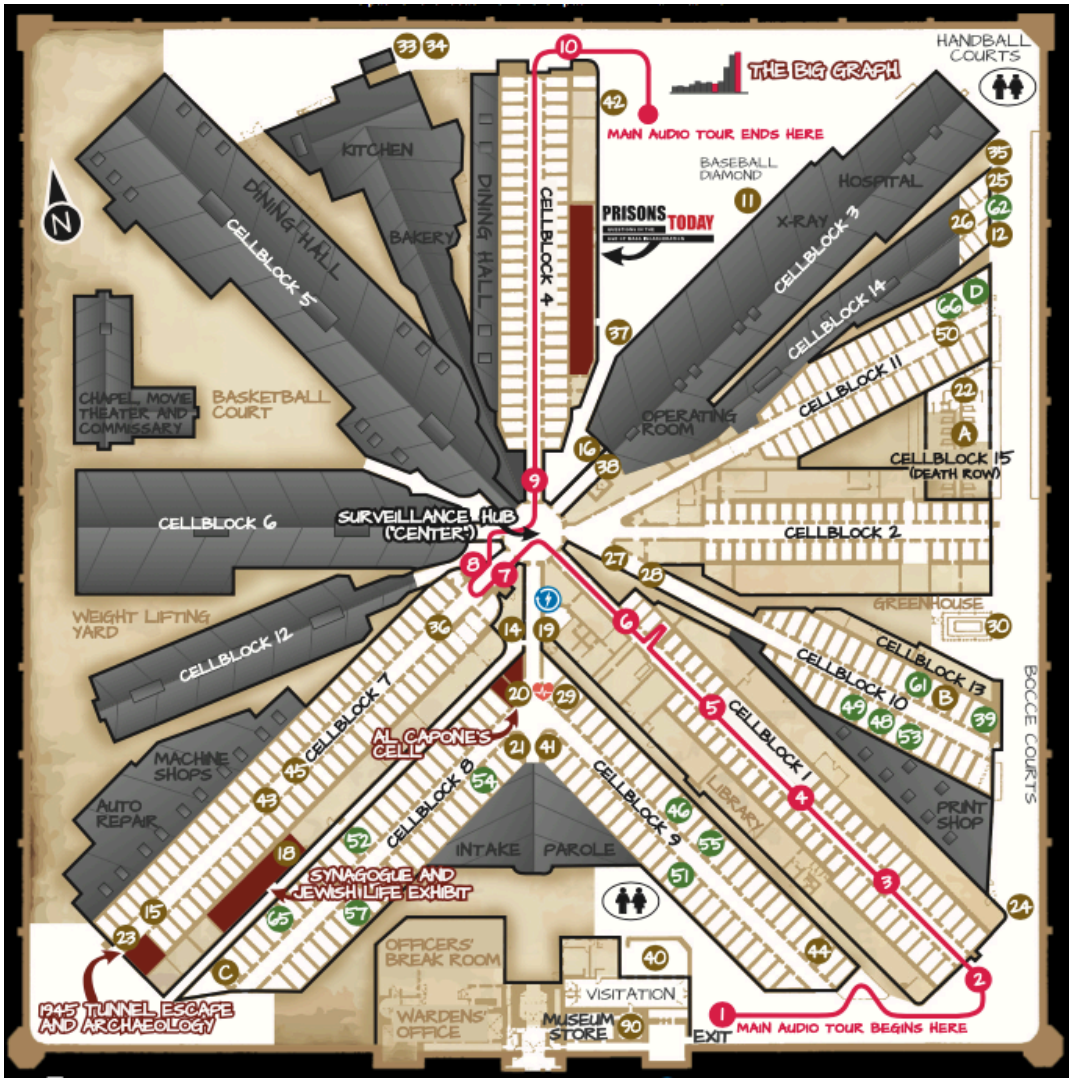

Funding and Installation Extension:

There is no fee to apply to Eastern State's artist program. The online submission portal, run by a third party, may charge a small fee for their services.

The historic site will fund a maximum $7,500.00 per Standard project and $15,000.00 per *Criminal Justice Today* project. This funding indicates approval to exhibit. All projects that are approved will be installed for one full tour season (typically May 1 through November 30) unless the proposal states otherwise. Artists may apply for future installation cycles and should assume that the same guidelines, deadlines, and funding levels will apply.

- We recommend at least $1,000 of a maximum Standard funding proposal and $3,000 of a *Criminal Justice Today* proposal be dedicated to artist fees. Each project will be different, but we anticipate the *Criminal Justice Today* proposals will be time consuming projects. We do not accept proposals that dedicate no artist fee.

- Selection and funding are contingent upon a signed Letter of Agreement between the artist and the historic site. Twenty-five percent (25%) of the total budget will be withheld until the exhibit has been removed and the space returned to its condition prior to the installation.

- Many artists are able to secure additional funding for their installation at Eastern State. The historic site can sometimes act as the fiscal agent for an artist who has received additional funding from an outside foundation.

- We do not accept proposals for project development.

- Most funding for art programming is provided by Eastern State Penitentiary's Halloween fundraiser, *Terror Behind the Walls*. Additional funding is provided indirectly by foundations and other funding organizations. We may ask artists to recognize these funders in any printed materials or wall texts associated with their installation.

- The historic site produces an audio tour stop, up to two exhibit signs for each project, and press releases about the installations. The site also hosts an opening reception and produces an invitation to this reception. It is not necessary to include these expenses in the installation budget.

Extending an Installation: Artists whose work is currently installed may be invited to extend their installation for additional tour seasons. These invitations will come from the historic site staff.

Cindy Stockton-Moore, *Other Absences*. 2014 – present

Helpful Hints

- Follow the guidelines in this document. Although we try to be flexible in many ways, inability to follow these guidelines does not reflect well on an artist's professionalism and attention to detail.

- Attend an orientation if at all possible. Most artists report that the orientation had a strong impact on the evolution of their proposals. While at least four artists have submitted successful proposals without attending an orientation, these artists are the exception, not the rule. If you cannot attend an orientation, we recommend watching the videotaped orientation tour, found at EasternState.org/art.

- The Physical Project Description (Section D) of the narrative should be as literal as possible. Avoid interpretation of your work, and simply tell us what you plan to install. Example: "My project consists of thirty-nine white plaster castings of cats posed in various natural positions. Castings will be dispersed throughout the prison (primarily outdoors) located in areas they can be seen by the public on self-guided tours."

- Avoid proposing materials that will not hold up in Eastern State's environment. Work on paper or canvas, for example, generally cannot survive the harsh environment of Eastern State.

- Be careful not to romanticize the prison's history, make unsupported assumptions about the lives of people currently/previously incarcerated or guards, or suggest sweeping generalizations. The prison's history is complicated and broad. Simple statements often reduce its meaning.

- Previous work with similar subject matter is very promising. Let us know! A proposal to collaborate with people in prison or victims of violent crime by an artist who has never done so before, on the other hand, will raise concern.

- Do not suggest Eastern State solely as an architectural backdrop. ("Why Eastern State? *Because my work would look great there*!") Artist installations must deepen the experience of visitors who are touring this National Historic Landmark, addressing some aspect of the building's legacy or relevance today.

- Although your proposal must address some aspect of Eastern State's significance, feel free to think about this significance broadly. It is not necessary to incorporate Eastern State's history, for instance. Many successful proposals, including Nick Cassway's *Portraits of Inmates in the Death Row Population Sentenced as Juveniles* and Ilan Sandler's *Arrest*, did not focus on Eastern State's history at all. They did, however, address subjects central to the topics we hope our visitors will be contemplating during their visit.

- Some of our best installations did address Eastern State's history, including Linda Brenner's *Ghost Cats,* Cindy Stockton Moore's *Other Absences* and Greg Cowper's *Specimen,* currently on view. If you are going to include information about Eastern State's history, please make sure you are accurate. Artists should be sensitive to the history of the space and only include historical information in the proposal if it is relevant to the work. Our staff is available to consult on historical accuracy. An extensive history of Eastern State Penitentiary, including detailed narratives and information on specific inmates, can be downloaded and searched electronically on our website: https://www.easternstate.org/research/history-eastern-state/biographies

- Overt political content can be good.

- The historic site staff has been focusing explicitly on the modern American phenomenon of mass incarceration, on questions of justice and effectiveness within the American prison system today, and on the root causes of economic and racial disparities within our prison population. We welcome proposals that can help engage our visitors with these complex subjects.

- We hope to see multiple viewpoints expressed among the artists who create work for Eastern State. Every year we review dozens of proposals that express empathy for the people who served time at Eastern State or are serving time in prison today. We accept many of these proposals, generally resulting in successful installations. Past installations of this kind include Michael Grothusen's *midway of another day*, Dayton Castleman's *The End of the Tunnel*, and Provisional Island's *An Electric Kite.* However, the committee rarely sees proposals that explore the impact of violence on families and society in general or the perspective of victims of crime. Exceptions have been Ilan Sandler's *Arrest* (2000 to 2003) and Sharyn O'Mara's *Victim Impact Statement* (2010) and Cindy Stockton-Moore's *Other Absences*, currently on view. We hope to see more installations on those themes in the future.

- Samples of previous successful proposals are posted on our website: EasternState.org/art. Although some guidelines have changed since these proposals were written, the tone and

directness of the proposals (and their underlying vision of a successful work) remain exemplary.

- Be realistic. How much will you be able to accomplish with available funding and installation time?

- Propose to do it right. Budget for professional help with designing or fabricating the project, if necessary. Budget for assistants to help with the installation process unless you're confident you can do it all yourself. We are not looking for bargains, but for great installations the engage our visitors and built to last.

Susan Hagen, *Recollection Tableaux*. 2008 – 2012

Michael Grothusen, *midway of another day*. 2001 – 2008

Frequently Asked Questions (FAQs)

- **What do you think of my idea? Would you look at my proposal before I apply? Can I meet with staff during the proposal process?**

  Our staff is available via email and phone to discuss the logistics of the proposal process and the history/significance of Eastern State Penitentiary. Please contact Sean Kelley at sk@easternstate.org or Annie Anderson at aa@easternstate.org with questions. Because of our limited staff size and resources, we cannot meet with artists in person (except at an orientation) to discuss their proposals. We're also happy to clarify the goals of this program. Please don't hesitate to ask! We will generally defer, however, to the review committee on questions of the artistic merit of an idea. That's the role of the committee, after all.

- **May I visit the prison on another day (not an artist orientation)?**

  Only if you pay general admission and attend as a typical visitor. Orientations are free of charge, but we cannot provide free access or arrange for staff input at other times. A videotaped art orientation tour can be found here: EasternState.org/art.

- **May I photograph/film?**

  You're welcome to photograph or film during your visit as long as you are not disruptive and show common-sense courtesy to other visitors. We ask for no photography or filming during orientation tours themselves. Tripod passes are also available at the site for a small fee.

- **What access may I have to the historic site archives during the proposal process?**

  We ask that artists withhold their requests to visit our archives until after their proposals have been approved. Our small staff cannot accommodate the volume of requests from all applying artists. Many research resources are available on our website: http://www.easternstate.org/node/42

  An extensive history of Eastern State Penitentiary, including detailed narratives and information on specific inmates, can also be downloaded and searched electronically from our website: https://www.easternstate.org/research/history-eastern-state/biographies

  Once a proposal has been accepted, the historic site staff can provide extensive access to the site archives.

- **I don't live in Pennsylvania / I don't live in the United States. May I still apply?**

  Yes. Several international artists have installed work at Eastern State through this program.

- **Can I apply for a later exhibit cycle?**

  Yes, but do so carefully. Artists sometimes find more time helpful if they plan to raise additional funds. We are more conservative, however, when accepting proposals beyond the current cycle under review. We recommend that artists not apply for future cycles unless they are confident that extra time is necessary.

- **How many proposals do you receive? How many artists are selected each year?**

  Every year is different, but in most years about 80 artists propose work and three are selected.

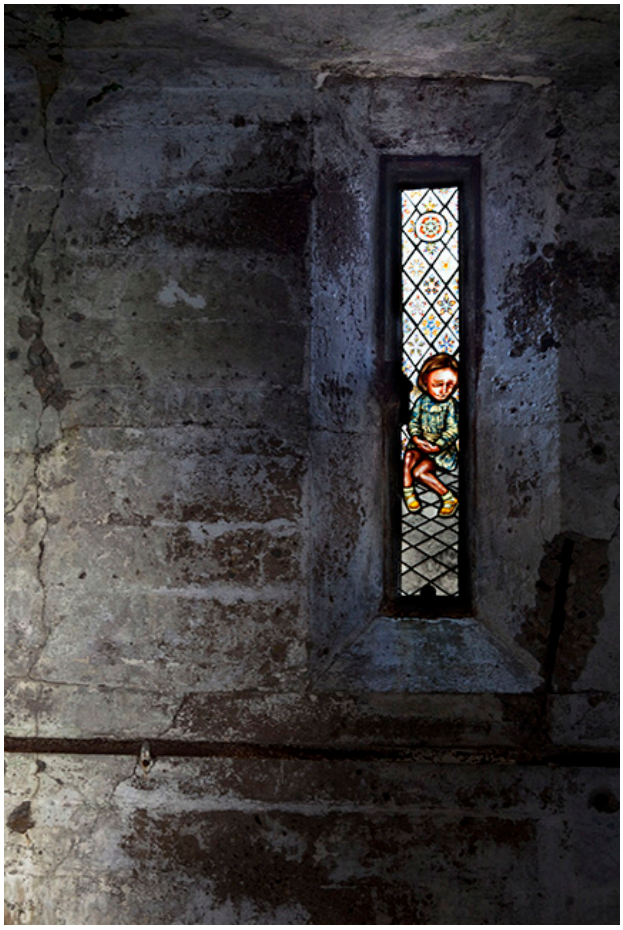

Judith Schaechter, *Daughter,* from the *Weeping Chorus, Battle of Carnival and Lent*. Stained glass, 2012.

- **I have pre-existing work. Can I propose to show it at Eastern State?**

  No. We do not knowingly accept proposals to exhibit existing work at Eastern State. Many artists work within a set method or practice, and new work within their set body of work may be appropriate.

- **I see Eastern State rarely exhibits paintings and photographs. Why?**

  We love seeing painters and photographers at the site, but work on paper or canvas generally cannot survive the harsh environment of Eastern State. Painter Mary DeWitt (paint onto window glass) and photographer Judith Taylor (direct emulsion onto the greenhouse windows) both found solutions to create work that could survive in this building. It can be done.

- **May I incorporate sound or video into my piece by using the audio equipment carried by visitors at the site?**

  Yes! Feel free to propose audio content for your work on the historic site's audio tour players (MP3 players). Most visitors to Eastern State carry an audio tour player. You are also welcome to incorporate sound using other technology.

- **Does the prison have Wi-Fi?**

  There is Internet access in many parts of the building. You should specify in your proposal that you need Wi-Fi. If your proposal is accepted, our team will make sure your piece is situated in a part of the building that has Wi-Fi.

- **May I suspend something from the ceiling or skylight?**

  Yes. Many artists have come up with creative strategies to work with this historic building. If your proposal is selected, we will work with our technical crew and architects to ensure a safe and successful installation.

- **What happens to the work at the end of the exhibit? May I keep it?**

  Artists are required to remove anything brought onto the property as part of their installations, and it becomes their property at that time.

- **May I sell my work after it's removed from Eastern State?**

  Yes. All work becomes the property of the artist(s) after it is removed from Eastern State.

- **Can I make planned changes to the piece after it's installed?**

  Yes. Many artists have created work designed to change and evolve over time, and they sometimes plan periodic changes to the work as part of their proposal.

- **May I sell my work in the site's museum store?**

  No.

- **Where can I stay while in Philadelphia?**

  Eastern State is located in the Fairmount neighborhood of Philadelphia, about 1.5 miles north of the Center City (downtown) district. Hotels are plentiful in Center City.

- **May I exhibit on the outside walls/terraces?**

  In theory, yes. These projects can be complex because the historic site neighbors must be consulted regarding anything on the outside walls. It has been done successfully on two occasions, and we encourage artists to propose more such work in the future.

  The most recent example was Dayton Castleman's *End of the Tunnel:* https://www.easternstate.org/sites/easternstate/files/inline-files/dayton.pdf

- **When will the guidelines be posted for the next round? How can I stay informed about the art program at Eastern State Penitentiary?**

  Sign up for our artist opportunity electronic newsletter! We only send two or three emails a year. To sign up for this newsletter, please visit: EasternState.org/art.

- **How big is a cell? How long is a cellblock?**

  Cell sizes vary throughout the prison, but the variations are generally minor. For the purposes of this proposal, please assume that the below measurements will apply to the cell(s) in which you will site your work. The illustration below is available as a Google SketchUp File. Please email Annie Anderson at aa@easternstate.org if you would like to receive the file.

  Cellblock lengths also vary dramatically. Please assume that cellblocks are 10 feet wide by 250 feet long for the proposal process. Artists whose proposals have been accepted should take careful measurements of the exact spaces in which their work will be exhibited prior to building their installations.

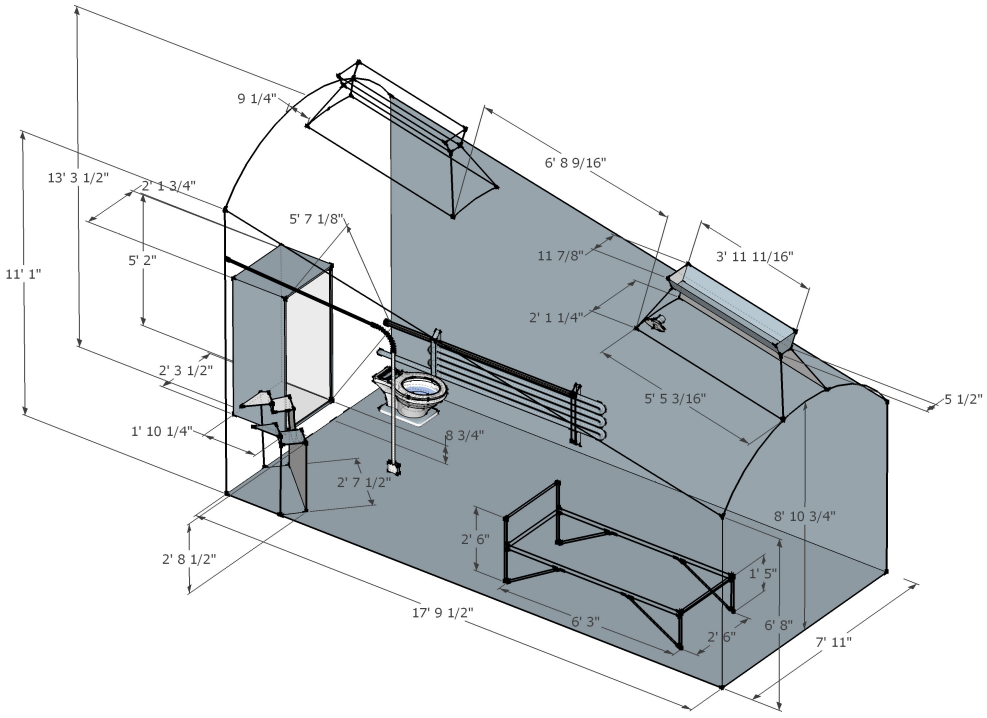

The Proposal

Part 1: The Written Proposal

The submission portal will be available on April 1, 2019 at EasternState.org/art. Please write your proposal in advance and plan to submit it in one sitting. Our third-party online portal may not allow applicants to save an application and return to it later.

A. Contact Information:
   i. Full name(s) of all artists on the project
   ii. Postal address
   iii. Telephone number
   iv. Email address (*Artist notification will take place via email.*)

Note: If there is more than one artist on a collaborative team, please identify one individual as the "Point of Contact." Then list only this individual's postal address, phone number and email. All communications will be conducted with this member of the collaborative team.

B. Funding Level:
   i. Choose one:
      i. Standard Funding Level
      ii. *Criminal Justice Today* Funding Level

C. Installation Title and Location:
   i. Title of the proposed installation
   ii. Location of proposed work (if flexible, write "Any Location.")

Note: Artists applying for a specific area should identify this area by its historical name (e.g. "Cellblock 7") and not by a map symbol (e.g. "A2") as these may change from year to year.

D. Physical Project Description (100 words maximum):
   i. A description of the proposed work in the most literal sense, naming materials and placement. Avoid interpretation of your work, and simply tell us what you plan to install. Use language that is as clear and direct as possible. See the "Helpful Hints" section for an example.

E. Illustration(s) of Proposed Work:
   i. Proposals must contain between 1 and 5 sketches or digital illustrations of the proposed installation.

F. Narrative (1.000 words max for Standard Funding; 2,000 words max for *Criminal Justice Today* Funding):
   i. Detailed project description, including a broader explanation of the proposed work
   ii. "Why Eastern State Penitentiary?"
   iii. How will this work contribute to a visitor's experience of touring Eastern State Penitentiary?
   iv. List the types of maintenance the piece will require.
   v. Will the work create sound? If so, how much?
   vi. Will your installation require Wi-Fi?
   vii. Did you attend an artist orientation? If so, what date? Have you visited the site during non-orientation times?

G. Requested Funding/Budget:
   i. State the requested dollar amount and then itemize how it will be spent. The more specific the budget, the better. List exact equipment models and number of hours/pay rate of assistants, etc. Account for how additional funds, if required, will be secured.

Part 2: Artist Background

A. Previous Work: Titles and Descriptions of Electronic Files:

Artists may upload a maximum of 12 electronic files illustrating previous work.

These files may be photographs, audio files (2 minutes maximum length, per file), or video (2 minutes maximum length, per file). Multiple common file types (PDF, jpg, tif, mov, MP3, and more) will be accepted. Collaborative teams must still limit themselves to 12 electronic files, total, regardless of format or content.

Electronic file names should include the artist's last name and the sequence number (i.e. "Cardiff_1.jpg," "Cardiff_2.jpg").

B. Resume/ Curriculum Vitae/ Previous Exhibition List:

Maximum 3 pages per artist.